TAYLOR OPAQUE STEEL EDGE DOOR
Utilizing an
ADJUSTABLE STEEL DOOR FRAME

INSWING / OUTSWING
"IMPACT"

Digitally signed by Lyndon F Schmidt
Date: 2025.12.22 11:15:59 -05'00'

This item has been digitally signed and sealed by **L. F. Schmidt, P.E.** on the date adjacent to the seal.

Printed copies of this document are not considered signed and sealed and the signature must be verified on any electronic copies.

THIS PRODUCT APPROVAL IS VALID ONLY FOR THE STATE OF FLORIDA

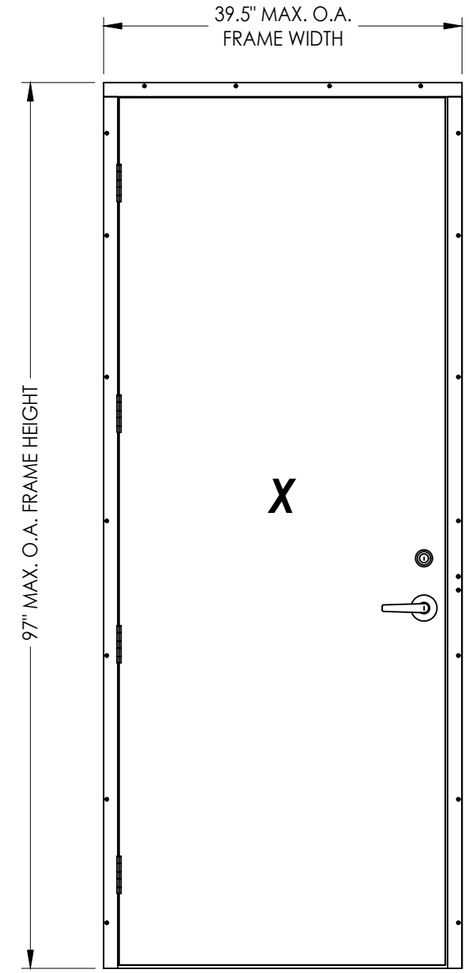

GENERAL NOTES

1. This product has been evaluated and is in compliance with the 8th Edition (2023) Florida Building Code (FBC) structural requirements including the "High Velocity Hurricane Zone" (HVHZ).

2. Product anchors shall be as listed and spaced as shown on details. Anchor embedment to base material shall be beyond wall dressing or stucco.

3. When used in the "HVHZ" this product complies with Section 1626 of the Florida Building Code and does not require an impact resistant covering.

3. When used in areas requiring wind borne debris protection this product complies with FBC Sections 1609.1.2 & R301.2.1.2 and does not require an impact resistant covering. This product meets missile level "D" and includes Wind Zone 4 as defined in ASTM E1996 and FBC Sections 1609.1.2.2 & R301.2.1.2.1.

4. Site conditions that deviate from the details of this drawing require further engineering analysis by a licensed engineer or registered architect.

5. Configurations utilizing the high-dam outswing bump threshold (item #32) meet water infiltration requirements for the "HVHZ".

6. Configurations utilizing inswing threshold (item #30) and the ADA threshold (item #31), do not meet the water infiltration requirements for the "HVHZ". These units shall be installed only in non-habitable areas or at habitable locations protected by an overhang or canopy such that the angle between the edge of canopy or overhang to sill is less than 45 degrees.

8. When used in the "HVHZ", steel must be protected as specified in FBC Section 2222.6.

TABLE OF CONTENTS

SHEET#	DESCRIPTION
1	Typical elevations, design pressures, & general notes
2	Door panel details
3	Elevation & horizontal cross sections
4	Vertical cross sections
5	Buck & frame anchoring
6	Bill of materials & components

MAX. OVERALL FRAME DIMENSION	DESIGN PRESSURE (PSF) INSWING		DESIGN PRESSURE (PSF) OUTSWING	
	POSITIVE	NEGATIVE	POSITIVE	NEGATIVE
39.5" X 97.0"	+70.0	-75.0	+70.0	-70.0

SEE SHEET 2 FOR HARDWARE DESIGN PRESSURE LIMITATIONS

Documents Prepared By:
Lyndon F. Schmidt
P.E. No. 43409
RW BUILDING CONSULTANTS, INC.
P.O. Box 230, Valrico, FL 33595
Phone No.: 813.659.9197
FBPE Registry No. 9813

PRODUCT: TAYLOR ENTRACE SYSTEMS STEEL DOOR

PART OR ASSEMBLY: TYPICAL ELEVATION, DESIGN PRESSURES, & GENERAL NOTES

NO.	DATE	REVISIONS	BY

DATE: 12/08/25
SCALE: N.T.S.
DWG. BY: LFS
CHK. BY: RW
DRAWING NO.: FL-14513.7
SHEET 1 OF 6

© 2025 R.W. Building Consultants Inc.

Z:\2023 FBC Drawings\Taylor Entrance Systems\FL-14513 R5\FL-14513.7.dwg

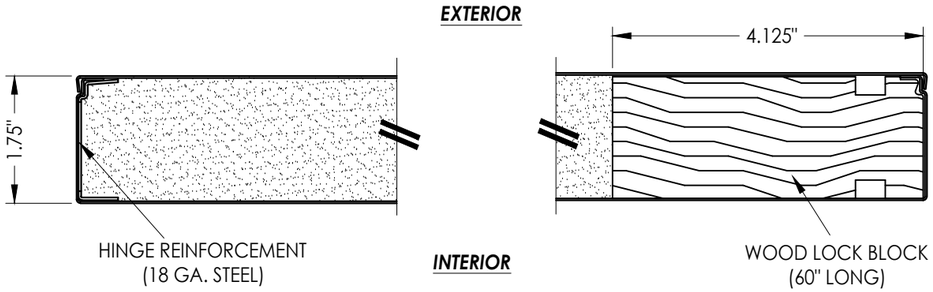

1/2 **HORIZONTAL CROSS SECTION**

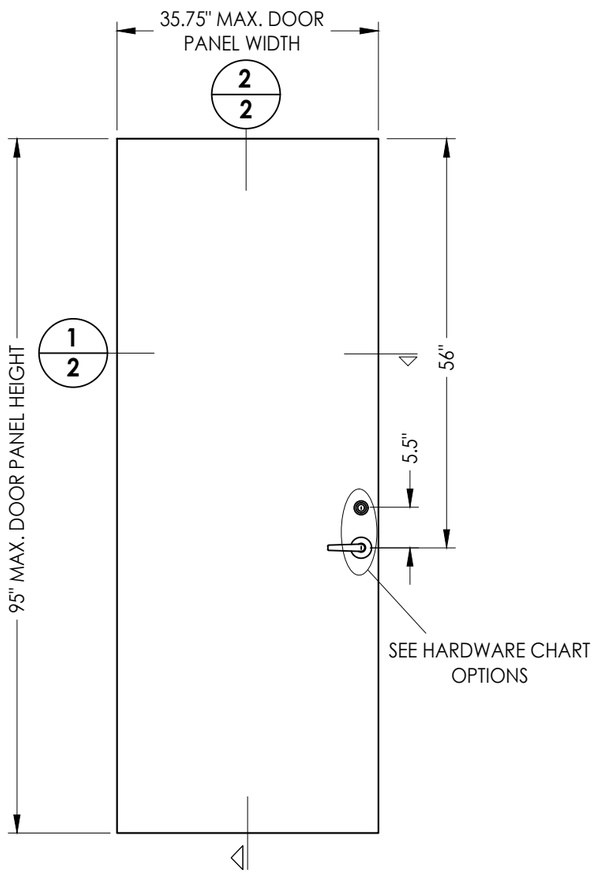

40 **TAYLOR FIXED PANEL**
Steel Edge Steel Door

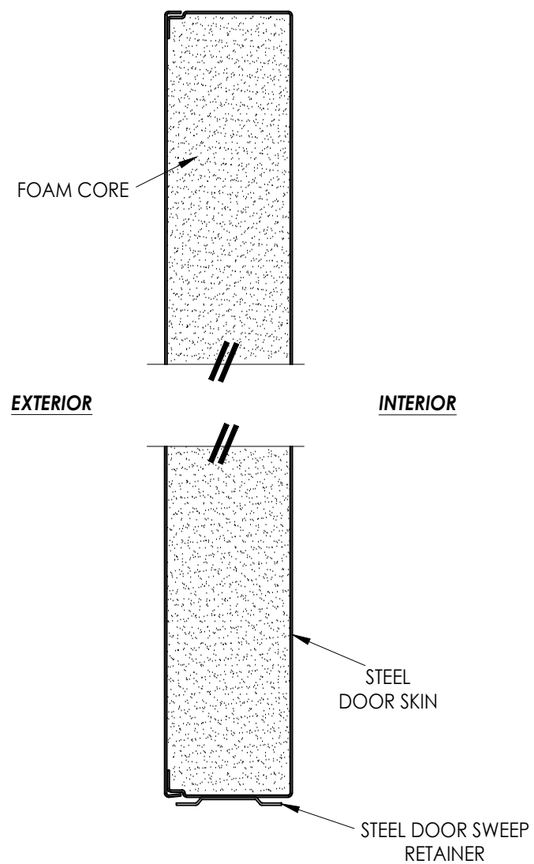

2/2 **VERTICAL CROSS SECTION**

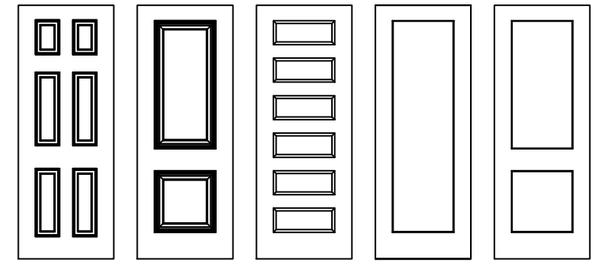

Taylor Opaque Door Panel Options

Products approved include all embossed and recessed panel doors.
Panels shown are for illustration and are representative only.

HARDWARE CHART		
MANUFACTURER	MODEL	MAX. DESIGN PRESSURE
PAMEX	LEVER: FYT SERIES DEADBOLT: FDP SERIES	75 PSF
PAMEX	INTERCONNECTED LOCK LEVER & DEADBOLT: FI35 SERIES	75 PSF
SCHLAGE	LEVER: F SERIES DEADBOLT: B60/62	50 PSF (OUTSWING ONLY)

DOOR SKIN: MIN. 0.020" THK. STEEL (Fy = 33,000 PSI MIN.)
CORE MATERIAL: POLYURETHANE FOAM

Documents Prepared By:
Lyndon F. Schmidt
P.E. No. 43409
RW BUILDING CONSULTANTS, INC.
P.O. Box 230, Valrico, FL 33595
Phone No.: 813.659.9197
FBPE Registry No. 9813

PRODUCT: TAYLOR ENTRACE SYSTEMS STEEL DOOR
PART OR ASSEMBLY: DOOR PANEL DETAILS

NO.	DATE	REVISIONS	BY

DATE: 12/08/25
SCALE: N.T.S.
DWG. BY: LFS
CHK. BY: RW
DRAWING NO.: FL-14513.7
SHEET 2 OF 6

© 2025 R.W. BUILDING CONSULTANTS INC.

Z:\2023 FBC Drawings\Taylor Entrance Systems\FL-14513 R5\FL-14513.7.dwg

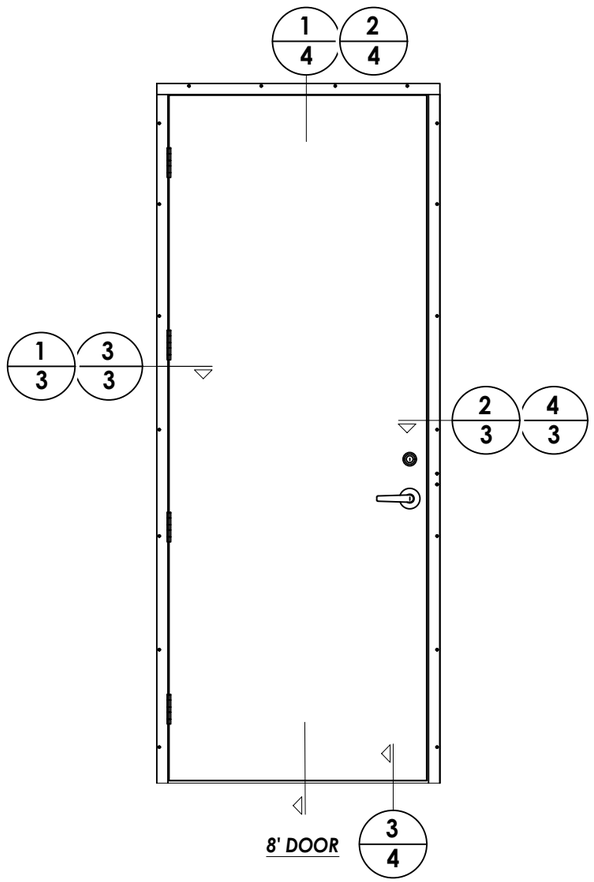

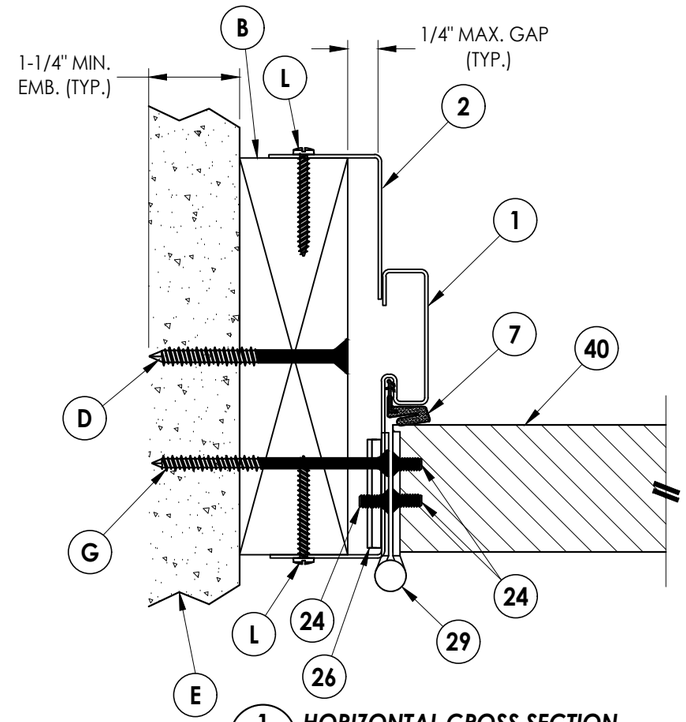

1/3 HORIZONTAL CROSS SECTION
2x Buck Construction
Outswing Shown (Inswing Similar)

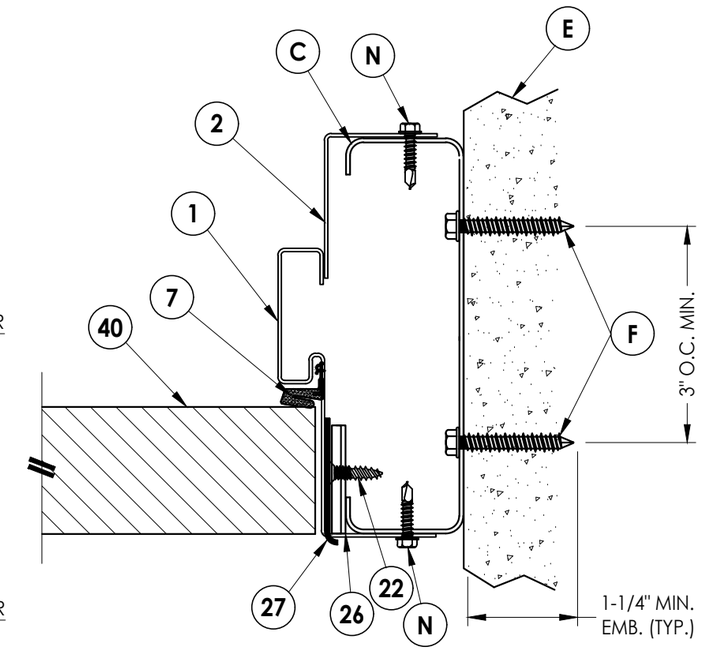

2/3 HORIZONTAL CROSS SECTION
Steel Stud Construction
Outswing Shown (Inswing Similar)

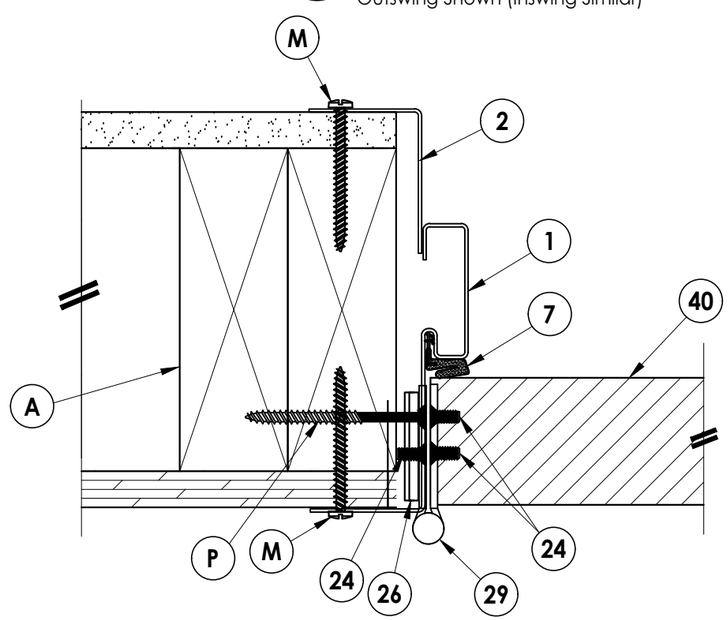

3/3 HORIZONTAL CROSS SECTION
2x Stud Construction
Outswing Shown (Inswing Similar)

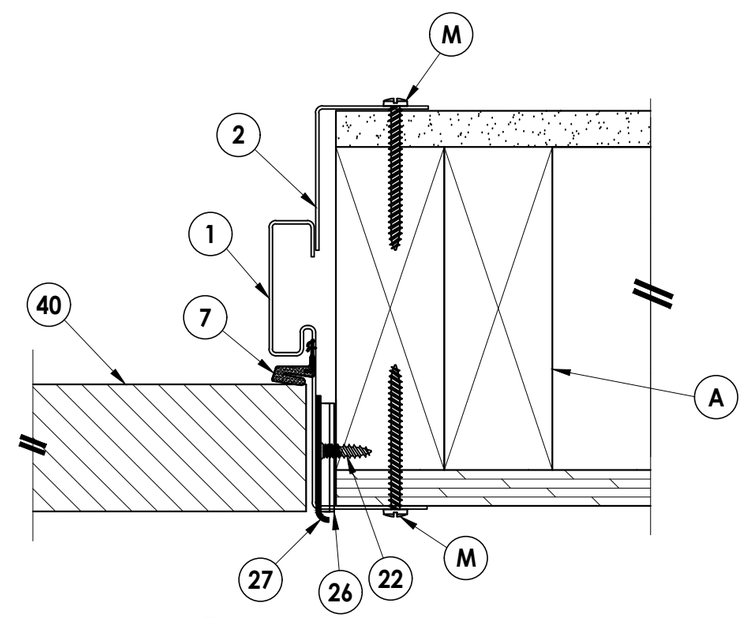

4/3 HORIZONTAL CROSS SECTION
2x Stud Construction
Outswing Shown (Inswing Similar)

Documents Prepared By:
Lyndon F. Schmidt
P.E. No. 43409

RW BUILDING CONSULTANTS, INC.
P.O. Box 230, Valrico, FL 33595
Phone No.: 813.659.9197
FBPE Registry No. 9813

PRODUCT: TAYLOR ENTRACE SYSTEMS STEEL DOOR

PART OR ASSEMBLY: ELEVATION & HORIZONTAL CROSS SECTIONS

NO.	DATE	REVISIONS	BY

DATE: 12/08/25
SCALE: N.T.S.
DWG. BY: LFS
CHK. BY: RW
DRAWING NO.: FL-14513.7
SHEET 3 OF 6

© 2025 R.W. BUILDING CONSULTANTS INC.

Z:\2023 FBC Drawings\Taylor Entrance Systems\FL-14513 R5\FL-14513.7.dwg

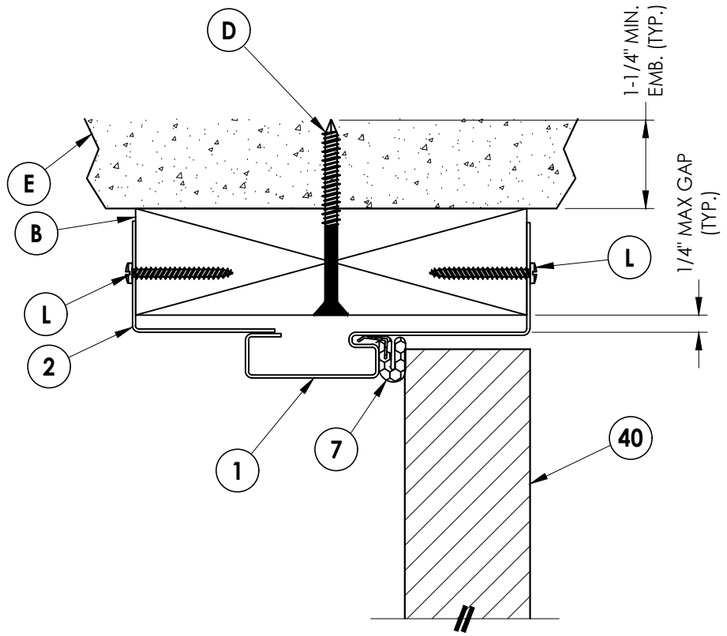

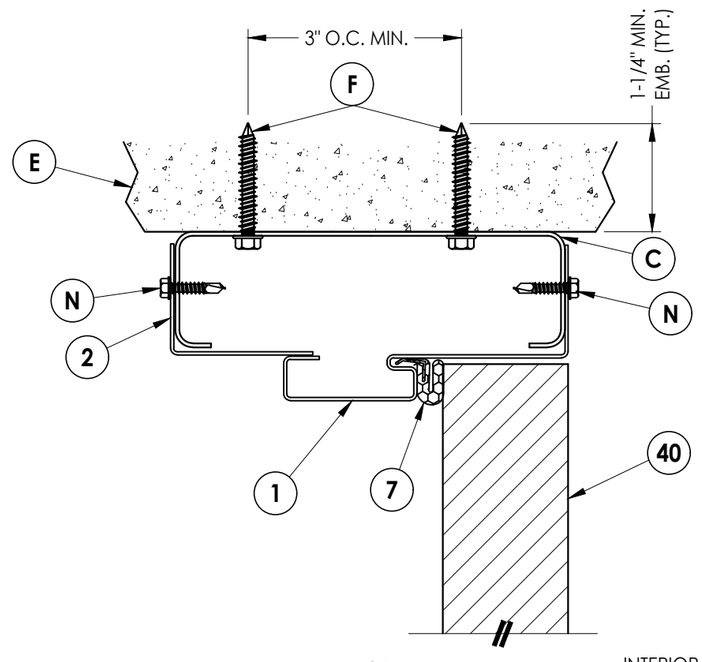

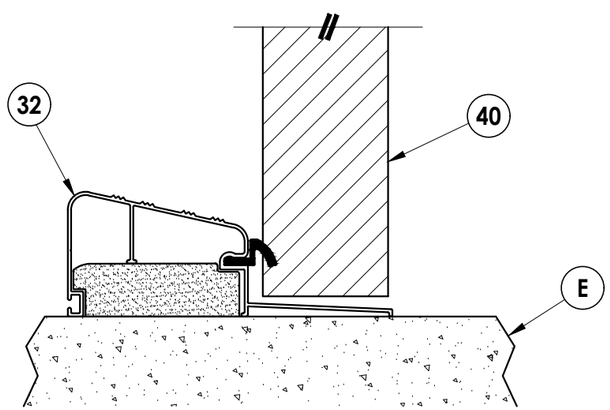

1/4 **VERTICAL CROSS SECTION**
Outswing Shown

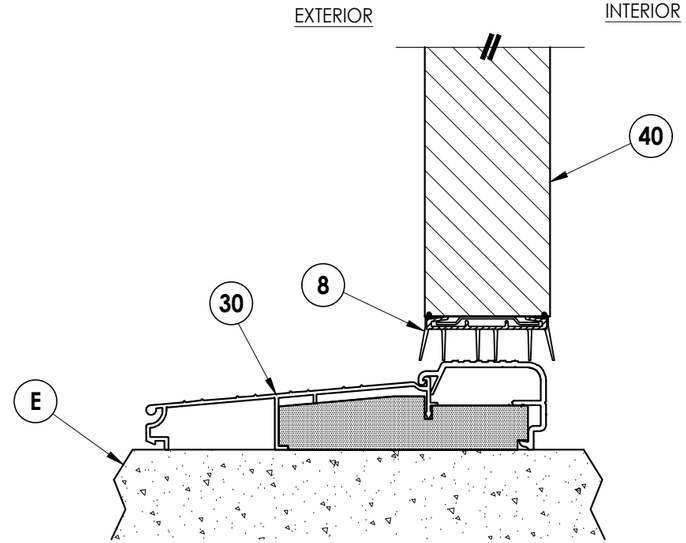

2/4 **VERTICAL CROSS SECTION**
Inswing Shown

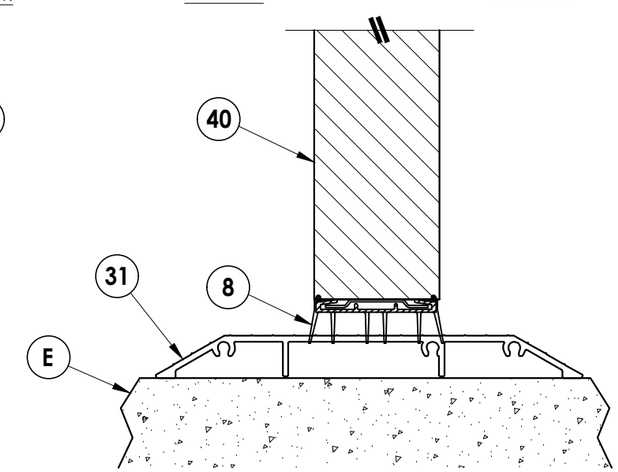

3/4 **VERTICAL CROSS SECTION**

Documents Prepared By:
Lyndon F. Schmidt
P.E. No. 43409

RW BUILDING CONSULTANTS, INC.
P.O. Box 230, Valrico, FL 33595
Phone No.: 813.659.9197
FBPE Registry No. 9813

PRODUCT:
TAYLOR ENTRACE SYSTEMS
STEEL DOOR

PART OR ASSEMBLY:
VERTICAL CROSS SECTIONS

NO.	DATE	BY

REVISIONS

DATE: 12/08/25
SCALE: N.T.S.
DWG. BY: LFS
CHK. BY: RW
DRAWING NO.: FL-14513.7
SHEET 4 OF 6

© 2025 R.W. BUILDING CONSULTANTS INC.

Z:\2023 FBC Drawings\Taylor Entrance Systems\FL-14513 R5\FL-14513.7.dwg

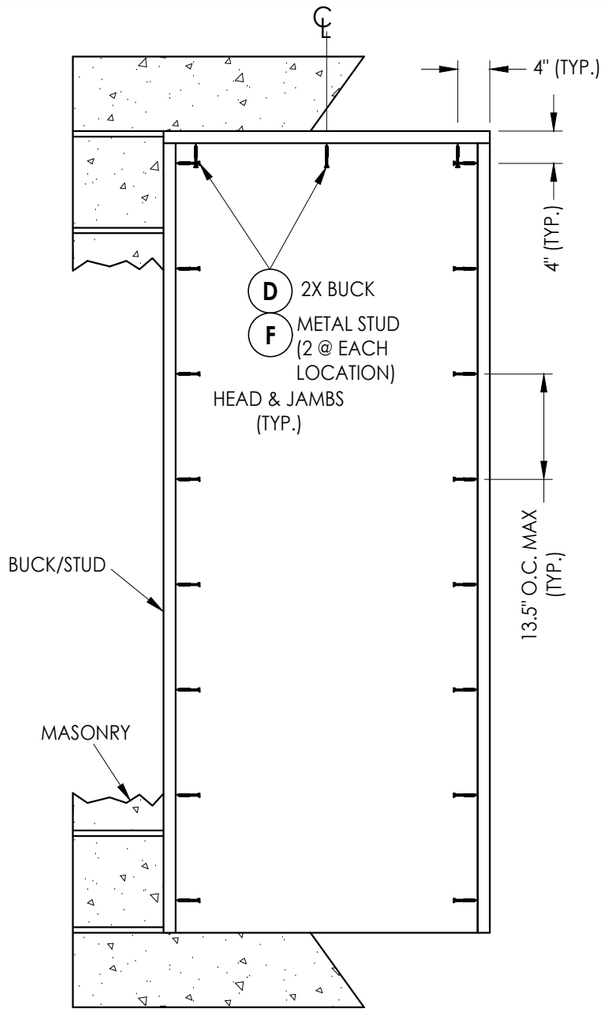

BUCK ANCHORING
8' Door

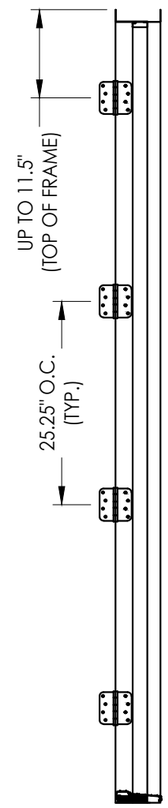

HINGE JAMB

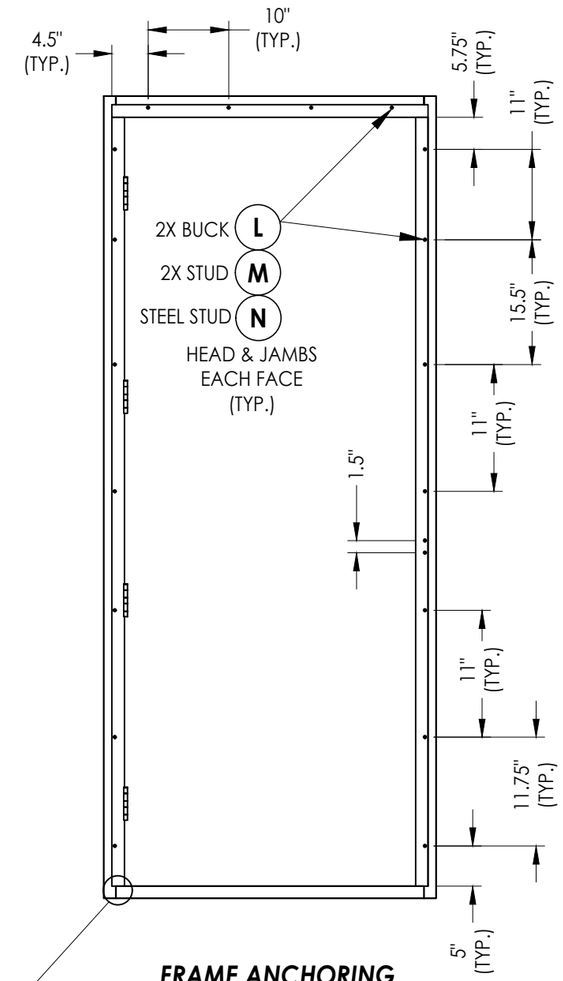

FRAME ANCHORING
8' Door

FRAME CORNERS ATTACHED TO SILL w/ (3) #8 X 2" SMS (TYP.)

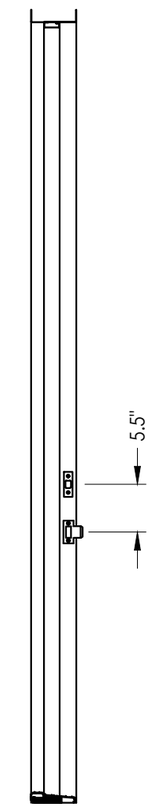

STRIKE JAMB

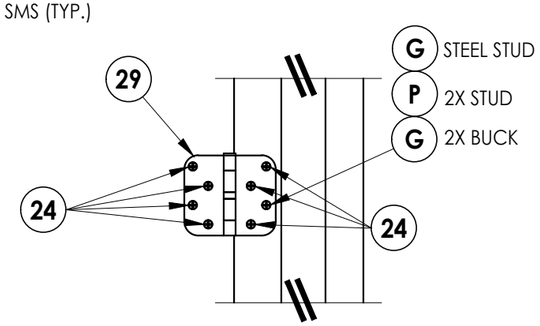

HINGE DETAIL

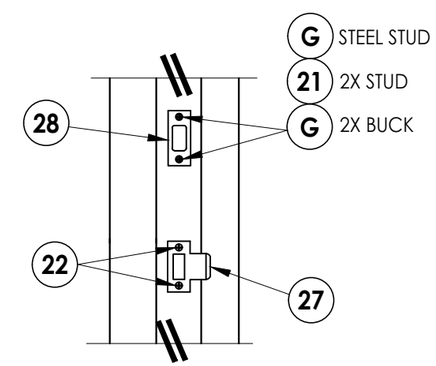

STRIKE PLATE DETAIL

CONCRETE ANCHOR NOTES:

1. *Concrete anchor locations at the corners may be adjusted to maintain the min. edge distance to mortar joints.*
2. *Concrete anchor locations noted as "MAX. ON CENTER" must be adjusted to maintain the min. edge distance to mortar joints, additional concrete anchors may be required to ensure the "MAX. ON CENTER" dimension are not exceeded.*
3. *Concrete anchor table:*

ANCHOR TYPE	ANCHOR SIZE	MIN. EMBEDMENT	MIN. CLEARANCE TO MASONRY EDGE	MIN. CLEARANCE TO ADJACENT ANCHOR
ITW TAPCON®	1/4"	1-1/4"	2"	4"
DeWALT ULTRACON+®	1/4"	1-1/4"	2-1/2"	4"
ITW TAPCON®	3/16"	1-1/4"	3"	1-1/2"

WOOD SCREW INSTALLATION NOTES:

1. *Maintain a minimum 5/8" edge distance, 1" end distance, & 1" o.c. spacing of wood screws to prevent the splitting of wood.*

Documents Prepared By:
Lyndon F. Schmidt
P.E. No. 43409
RW BUILDING CONSULTANTS, INC.
P.O. Box 230, Valrico, FL 33595
Phone No.: 813.659.9197
FBPE Registry No. 9813

PRODUCT: *TAYLOR ENTRACE SYSTEMS STEEL DOOR*

PART OR ASSEMBLY: *BUCK & FRAME ANCHORING*

NO.	DATE	REVISIONS	BY

DATE: 12/08/25
SCALE: N.T.S.
DWG. BY: LFS
CHK. BY: RW
DRAWING NO.: FL-14513.7
SHEET 5 OF 6

© 2025 R.W. Building Consultants Inc.

Z:\2023 FBC Drawings\Taylor Entrance Systems\FL-14513 R5\FL-14513.7.dwg

BILL OF MATERIALS

ITEM #	DESCRIPTION	MATERIAL
A	2X STUD FRAMING (SG>= 0.42)	WOOD
B	2X BUCK (SG >= 0.42)	WOOD
C	METAL STUD (SSMA STUD 550S162-54, Fy = 33 ksi, Fu = 45 ksi)	STEEL
D	1/4" X 2-3/4" DeWALT OR ITW PFH CONCRETE SCREW	STEEL
E	MASONRY - 3,000 PSI MIN. CONCRETE CONFORMING TO ACI 301 OR HOLLOW BLOCK CONFORMING TO ASTM C90 OR ASTM A653 STEEL	CONCRETE
F	3/16" X 1-3/4" HWH ITW CONCRETE SCREW	STEEL
G	3/16" X 3-1/4" DeWALT OR ITW PFH CONCRETE SCREW	STEEL
H	1/4" X 2-1/4" DeWALT OR ITW PFH CONCRETE SCREW	STEEL
K	1/4" X 1-3/4" DeWALT OR ITW PFH CONCRETE SCREW	STEEL
L	#10 X 1-1/2" PPH SMS (1-1/4" MIN. EMBEDMENT)	STEEL
M	#10 X 2" PPH SMS (1-1/4" MIN. EMBEDMENT)	STEEL
N	#10 X 3/4" HWH SELF-DRILLING TEK SCREW (3 THREADS MUST PROTRUDE THRU STEEL)	STEEL
P	#10 X 2" PFH WOOD SCREW	STEEL
1	EXTERIOR FRAME	STEEL
2	INTERIOR FRAME	STEEL
7	WEATHERSTRIP	-
8	DOOR SWEEP	PVC
20	#10 X 2-1/2" PFH WOOD SCREW	STEEL
21	#8 X 2" PFH WOOD SCREW	STEEL
22	#8 X 3/4" PFH COMBINATION MACHINE/WOOD SCREW	STEEL
24	10-24 X 5/8" PF MACHINE SCREW	STEEL
26	11 GA. HINGE & LATCH REINFORCEMENT	STEEL
27	LATCH STRIKE PLATE	STEEL
28	DEADBOLT STRIKE PLATE	STEEL
29	4" X 4" HINGE	STEEL
30	INSWING THRESHOLD	ALUM/COMP
31	ADA THRESHOLD	ALUM
32	OUTSWING THRESHOLD	ALUM/COMP
40	8' STEEL DOOR - SEE DOOR PANEL DETAILS	-

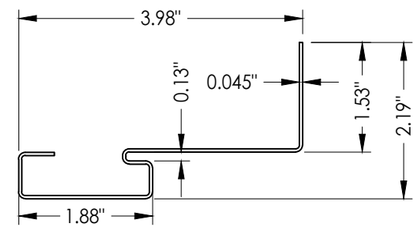

1 **EXTERIOR FRAME**
K2A SPLIT STEEL FRAME (18 GA.)
(INTERNATIONAL DOOR PRODUCTS)

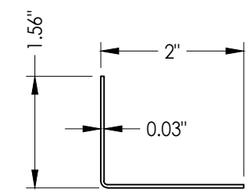

2 **INTERIOR FRAME**
K2A -SERIES

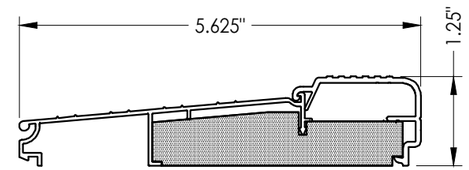

30 **INSWING THRESHOLD**
AFCO A-280

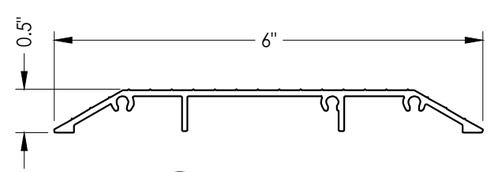

31 **ADA THRESHOLD**
AFCO A-202

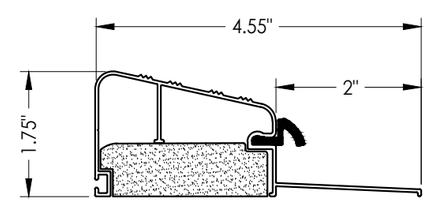

32 **OUTSWING THRESHOLD**
DLP

Documents Prepared By:
Lyndon F. Schmidt
P.E. No. 43409

RW BUILDING CONSULTANTS, INC.
P.O. Box 230, Valrico, FL 33595
Phone No.: 813.659.9197
FBPE Registry No. 9813

PRODUCT: TAYLOR ENTRACE SYSTEMS STEEL DOOR

PART OR ASSEMBLY: BILL OF MATERIALS & COMPONENTS

NO.	DATE	BY

REVISIONS

DATE: 12/08/25
SCALE: N.T.S.
DWG. BY: LFS
CHK. BY: RW
DRAWING NO.: FL-14513.7
SHEET 6 OF 6

© 2025 R.W. BUILDING CONSULTANTS INC.

Z:\2023 FBC Drawings\Taylor Entrance Systems\FL-14513 R5\FL-14513.7.dwg